Recommended Good Practice

This booklet summarises the findings from the report Improving the Performance of Crop Protection Enclosures to Resist Wind Loads conducted on behalf of the Nursery & Garden Industry Queensland (NGIQ) by the James Cook University, Cyclone Testing Centre (JCU CTC) and the Department of Agriculture, Fisheries and Forestry (DAFF).

It highlights the importance of considering the durability level to be specified, some comments on footings and provides typical details of the main structural types observed during this study and recommended good practice details for some of the components to each system.

1. Durability Considerations

With regards to the choice of level of durability, all components of the structure should be chosen by taking into account the design working life of the structure and the environment where they will be in service. Another critical consideration is the ease and costs to gain access to the components, should they need to be replaced. An example to demonstrate this principle is the main cables used in cable guyed structures. They should be manufactured from galvanized wire as a minimum requirement and because it is essentially a complete rebuild to replace the cables, stainless steel cables are likely to be the most cost effective over the life of the structure. Using the same reasoning, all of the fittings in these cable assemblies should also be hot dip galvanized.

Many of the columns used in shade house structures are fabricated from galvanized steel water pipe, so these components will be quite durable. Other steel components, such as square hollow section (SHS) columns, should be provided with an appropriate paint system, specified with a 'Duragal' finish or perhaps galvanized.

The Australian Building Codes Board (ABCB) has published a guide entitled *Durability in Buildings* (ABCB (2006)), which is available from the web and provides a good overview and general advice on the important issues to consider for durability.

2. General comments on foundations

Some general points to remember include:

1. Each type of footing for a particular structure should be purpose designed (do not copy footing sizes from other areas where factors such as the design loads and soil type are likely to be different).
2. In general terms, footings in sand will usually be larger than those in clay.
3. The sides of footings should be close to vertical, wherever feasible.
4. Extend the tops of footings at least 75 mm above finished ground level and provide a slope to the top surface.

3. Cable-guyed structures

Figure 1 and **Figure 2** show the plan and three sectional views for a typical cable-guyed structure.

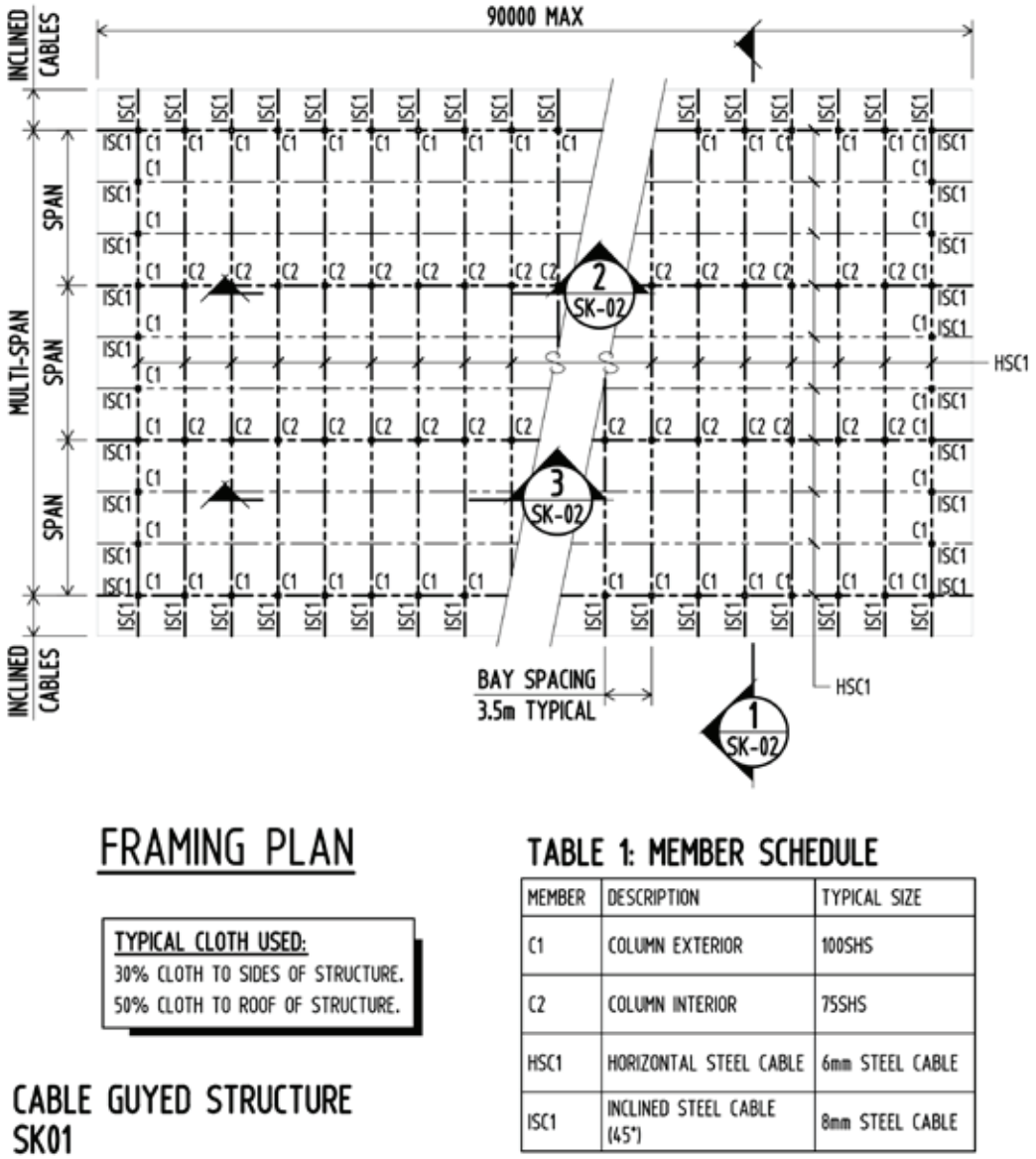

TABLE 1: MEMBER SCHEDULE

MEMBER	DESCRIPTION	TYPICAL SIZE
C1	COLUMN EXTERIOR	100SHS
C2	COLUMN INTERIOR	75SHS
HSC1	HORIZONTAL STEEL CABLE	6mm STEEL CABLE
ISC1	INCLINED STEEL CABLE (45°)	8mm STEEL CABLE

Figure 1: Plan of typical cable-guyed structure

3.1 Connections between cables

As indicated in Sections 1 and 3 drawn in **Figure 2**, the main horizontal steel cables form a rectangular grid of cables that cross each other at right angles. Although not shown, these cables should be connected to each other to improve the overall stiffness of the cable grid system.

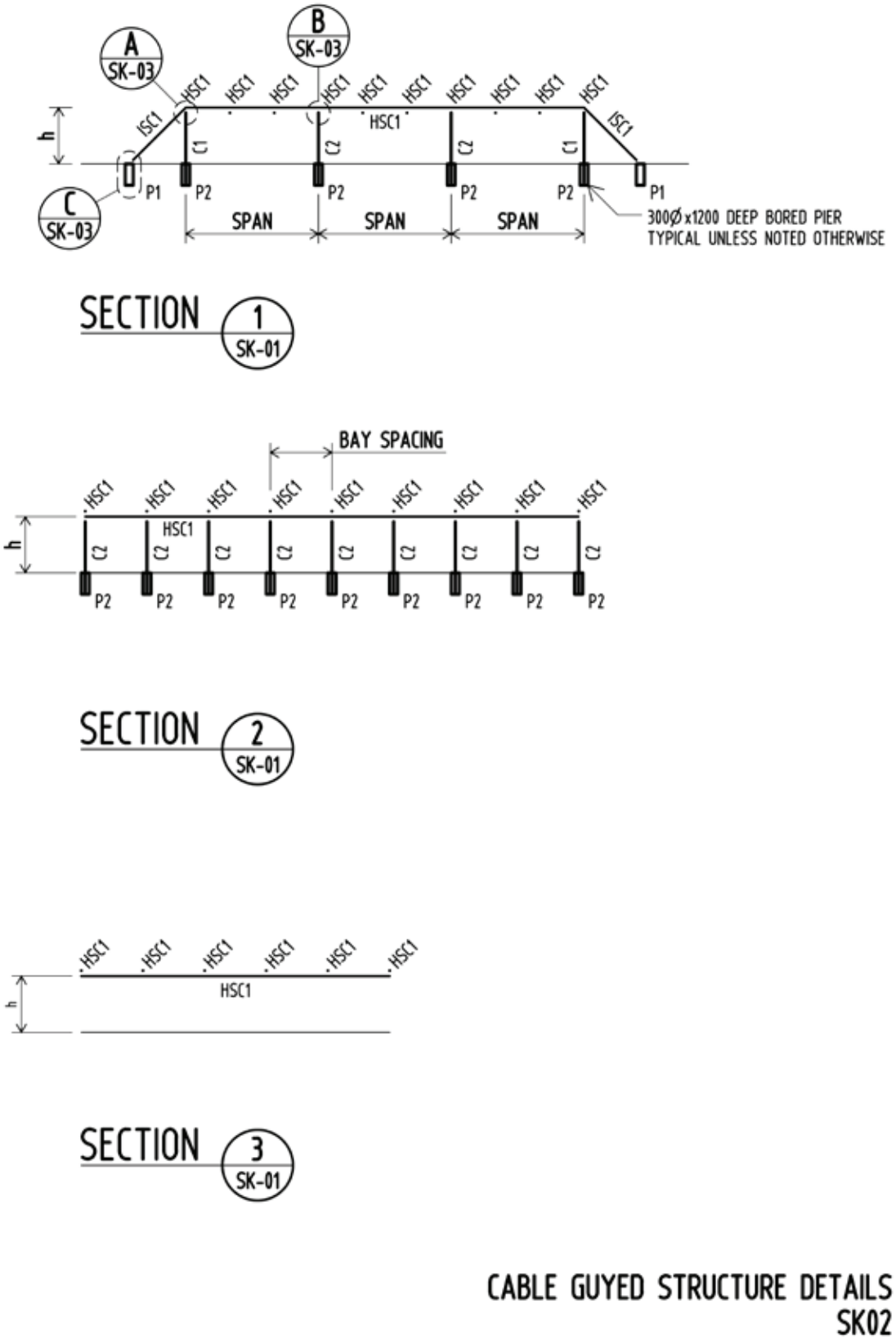

Figure 2: Sectional views for a cable-guyed structure

3.2 Connections to top of exterior columns

Typical connections of inclined and horizontal cables to the top of an exterior column are detailed in Section A of engineering drawing No. SK03, included here as **Figure 4.** The tensile force in the inclined cable (assuming it is sloped at 45°) will always be about 1.4 times larger than in the horizontal cable and so good practice is to ensure that the inclined cable is also at least 1.4 times stronger. All of the fittings that make up the cable assembly should also have approximately the same strength rating as the cable, so that there are no weak links.

Also shown in this detail is a possible connection detail to allow the main perimeter cable (that runs in the transverse direction) to be threaded through a heavy wall galvanized pipe that is welded to the column cap plate. Two cable clamps can be fitted to this cable either side of, and hard up against, each side of the pipe to restrain the top of the column. An alternative detail that was observed in some nurseries used a short length of round bar (nominally 16 or 20 mm in diameter), about 200 mm long welded to the cap plate. Then the transverse cable is clamped to this bar to anchor it into position. Although this alternative detail is not as secure as threading the cable through a tube, it has an advantage in that the cable is not able to move about in the oversize tube.

3.3 Connections to top of interior columns

The horizontal cables are best run continuously from one exterior column to the other exterior column at the other end of the complete cable length. However, these cables need to be restrained to the tops of the interior columns. Detail B drawn in **Figure 4** shows a typical detail that can be used to connect these cables to the column tops, again using the approach of threading the cables through two sets of tubes welded perpendicular to each other to a cap plate on the interior column. As for the perimeter cable to the exterior columns, cable clamps can be used to restrain the cables from moving in the horizontal direction once they have been installed and tensioned. Again, an alternative connection detail involves solid rods welded to the column top so that the cables can be clamped directly to them, as shown in **Figure 3**.

Figure 3: Horizontal cables clamped to round bar welded to top of interior column

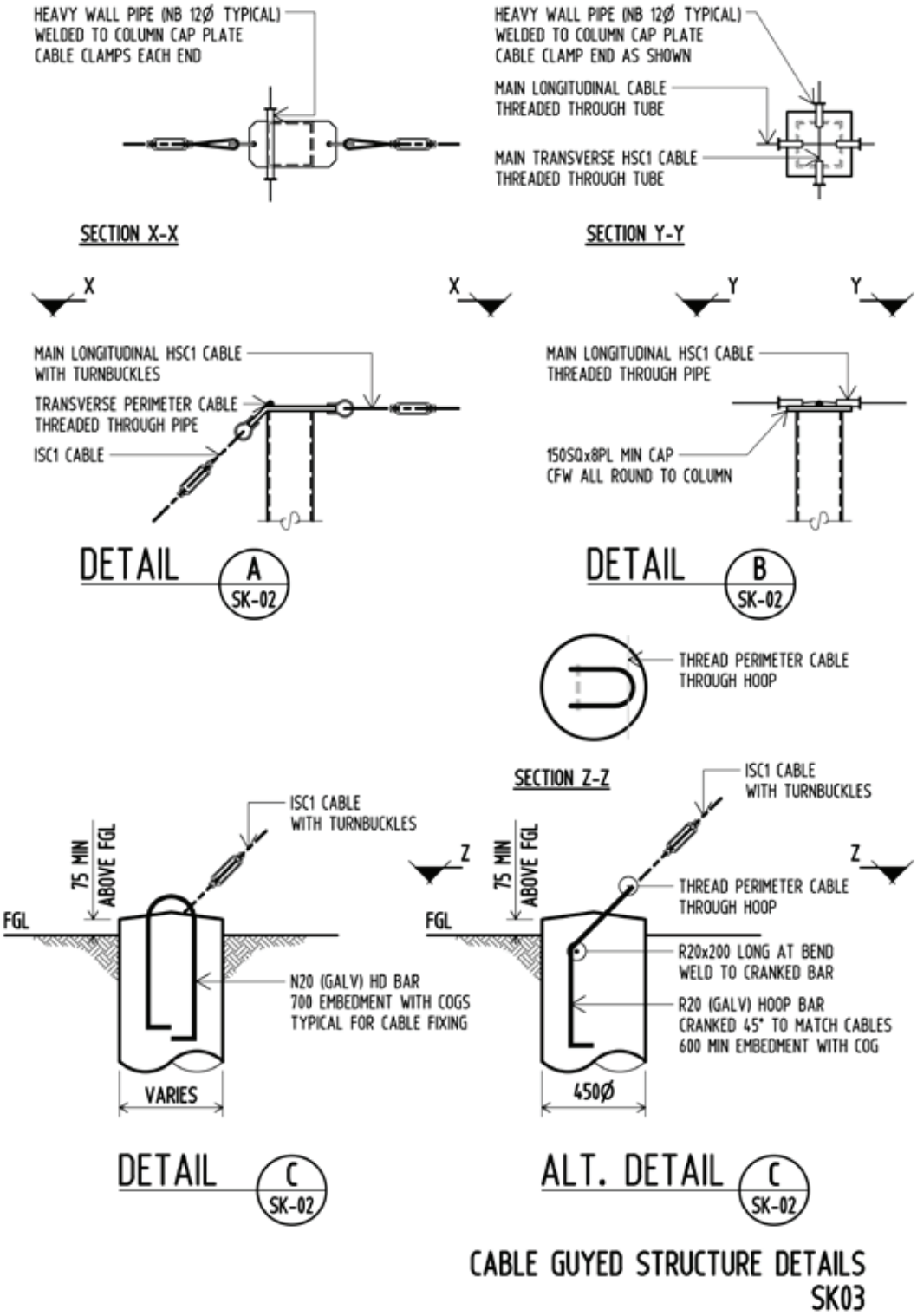

Figure 4: Good practice details for cable-guyed structures

3.4 Exterior footings for inclined cables

Detail C shown on Dwg No. SK03, reproduced as **Figure 4**, provides typical details for an exterior footing for an inclined cable. Here a galvanized hoop (typically 20 mm in diameter) is used to anchor the inclined cable. As shown in this detail, it is probably easier (and cheaper) to use just the one turnbuckle fitted at the lower end of the inclined cable to tighten the cable, rather than one fitted to the top end of the cable.

To prevent the 20 mm diameter steel hoop and cables being covered with soil and being at increased risk of corrosion, it is good practice to have the exterior column footing extend at least a nominal 75 mm above the Finished Ground Level (FGL) and to slope the top of the footing. The top of the footing should also be finished with a slight bevel/slope to prevent water ponding on top of the footing.

It is critically important that these exterior footings are designed to resist the combined effects of the horizontal and uplift loads that will be applied by the inclined cable.

An Alternative Detail C is also shown in **Figure 4**, which allows a lower perimeter cable to be threaded through the bent hoop bar. **Figure 5** is a photograph showing a perimeter cable threaded through a bent hoop. However, note also the leaves and debris collecting around the cable anchorage because the footing was not extended high enough above the ground.

Figure 5: Exterior footing to anchor inclined cable with perimeter cable threaded through hoop

4. Cantilever post structures

Figure 6 shows the typical details for a cantilever post structure that uses horizontal top rails to tie the tops of the posts together and allow them to share any lateral loads applied to the structure. These top rails need to be of a sufficient diameter so that they will not buckle if they are subjected to compression loads. An approximate rule of thumb is to ensure that the ratio of the top rail length (that is the distance between their supporting posts) to their diameter is not more than about 100 and that the pipe wall thickness is not less than 3 mm. It should be noted that these struts should be significantly larger if equipment or plant stock is to be suspended from them. These top rails are often connected to the posts using pipe clamps that rely on friction to “grip” the top rail. This means that if the joint becomes loose, or the connection is subjected to tension, the pipe can slip out of the clamp. To overcome this possible mode of failure, an extra M10 galvanized bolt could be inserted, as shown in **Figure 6.**

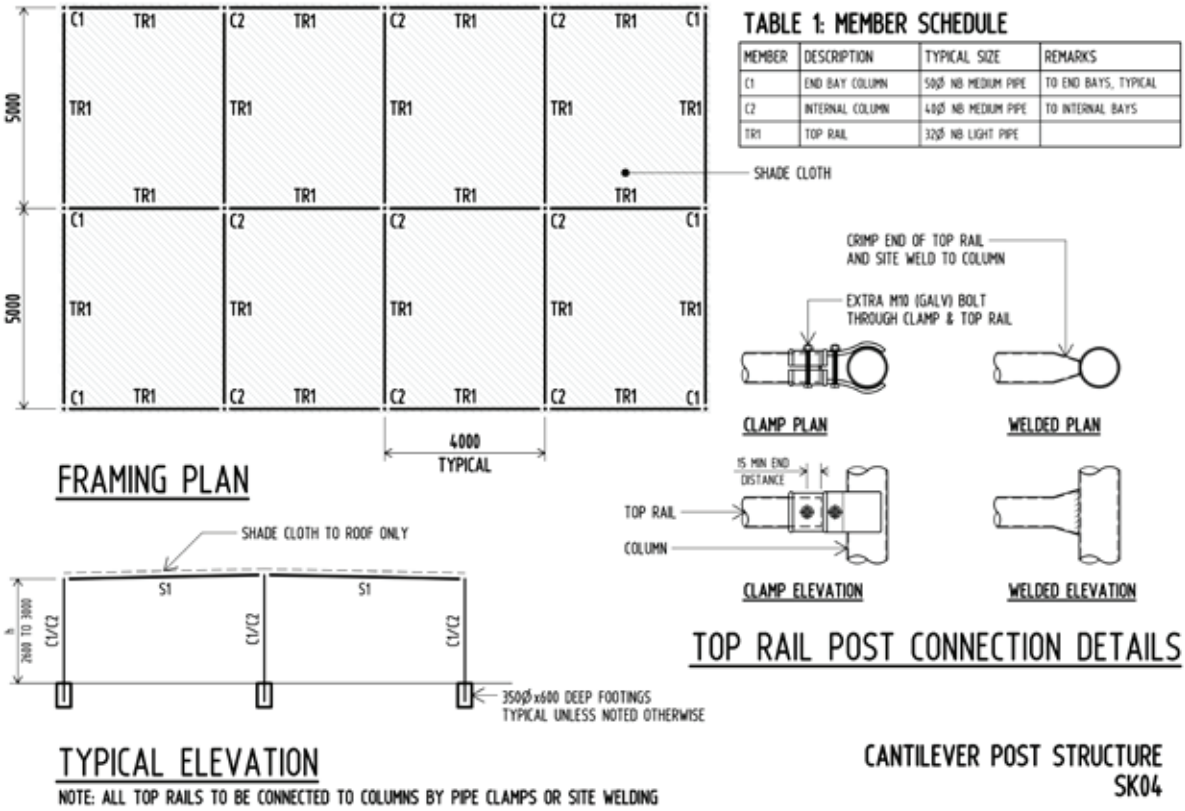

Figure 6: Details for typical cantilever post structure

An alternative method to ensure a ‘non-slip’ connection between the top rails and the posts is to crimp the ends of the top rails and site weld them to the posts, as also shown in Figure 6.

5. Hoop structures

Figure 7 shows typical details for a ‘hoop structure’. Based on the failure of the pipe clamp joint between the end wall mullion and the end frame hoop, it is recommended that these pipe clamps use an extra 10 mm bolt installed through the clamp and mullion, as noted in the detail for this connection.

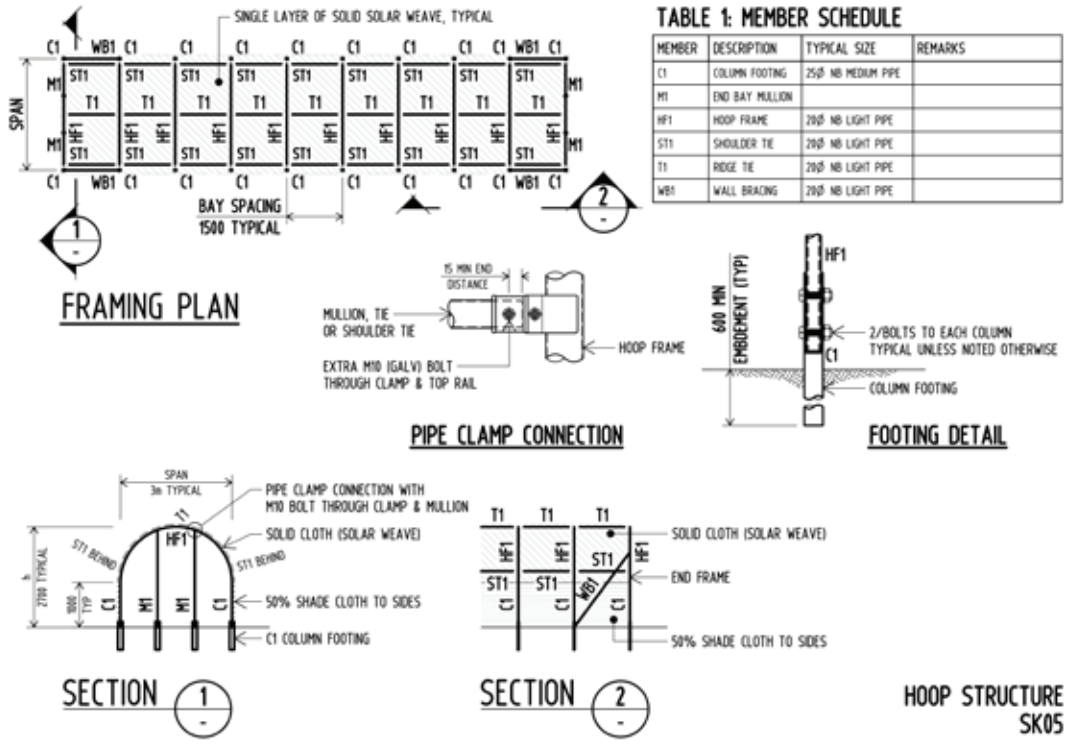

Figure 7: Details for typical hoop structure

6. Igloo structures

Figure 8 shows typical details for an igloo structure. Here it is recommended as good practice that three sets of crossed tension roof bracing and three ties between the end and first internal frames should be used at both ends. This will ensure that the top of the end wall mullions (marked M1 in Section 1) are supported by struts/ties to transfer the wind loads from the end walls via the roof bracing to the wall bracing member (marked WB1 in Section 2). Note that the details used for the 10 m span igloo structure shown in **Figure 12** where only two sets of tension bracing are used and the tops of the mullions to the end walls are not supported by ties are potential areas of weakness.

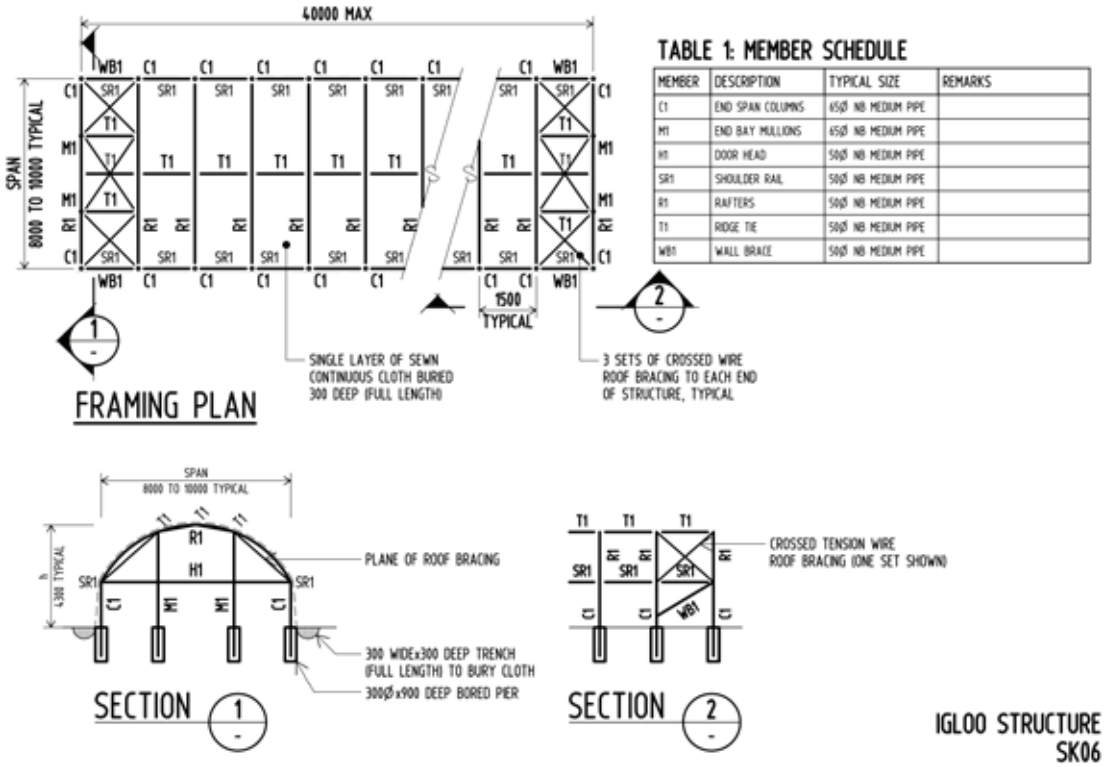

Figure 8: Typical details for an igloo structure